BioMamba: A Pre-trained Biomedical Language Representation Model Leveraging Mamba

Ling Yue[1], Sixue Xing[1], Yingzhou Lu[2], and Tianfan Fu*[1]

[1]Computer Science Department, Rensselaer Polytechnic Institute
[2]School of Medicine, Stanford University

August 6, 2024

arXiv:2408.02600v1 [cs.CL] 5 Aug 2024

Abstract

The advancement of natural language processing (NLP) in biology hinges on models' ability to interpret intricate biomedical literature. Traditional models often struggle with the complex and domain-specific language in this field. In this paper, we present BioMamba, a pre-trained model specifically designed for biomedical text mining. BioMamba builds upon the Mamba architecture and is pre-trained on an extensive corpus of biomedical literature. Our empirical studies demonstrate that BioMamba significantly outperforms models like BioBERT and general-domain Mamba across various biomedical tasks. For instance, BioMamba achieves a 100× reduction in perplexity and a 4× reduction in cross-entropy loss on the BioASQ[29] test set. We provide an overview of the model architecture, pre-training process, and fine-tuning techniques. Additionally, we release the code and trained model[1] to facilitate further research.

1 Introduction

Recent advancements in natural language processing (NLP) have led to the creation of pre-trained models like BERT (Bidirectional Encoder Representations from Transformers) [11] and GPT (Generative Pre-trained Transformer) [4], which have significantly enhanced performance across a variety of NLP tasks. BERT utilizes a Transformer [32] encoder architecture to consider the bidirectional context of words in a sentence, leading to more accurate and nuanced language representations. On the other hand, GPT employs a unidirectional, Transformer-decoder architecture [32] to generate text by predicting the next word in a sentence based on the preceding words.

Despite their success, these Transformer-based models face computational inefficiencies, especially with long sequences due to their quadratic complexity in sequence length. To address these limitations, the Mamba model [16] leverages structured state space models (SSMs) with parameters that are functions of the input, offering linear complexity in sequence length and making them more efficient for handling long sequences. This innovation makes Mamba a compelling choice for applications requiring efficient and scalable sequence modeling.

The exponential increase in biomedical literature necessitates the development of efficient and accurate text-mining tools to extract valuable insights [13, 7]. Traditional models often struggle to comprehend the complex and domain-specific language prevalent in biomedical texts [20]. Consequently, there is a critical need for advanced models capable of effectively handling biomedical text mining tasks, especially learning from an unlabeled text corpus [28].

In response to these challenges, we propose a biomedical variant of the Mamba model [16], a cutting-edge pretrained language model. BioMamba is pre-trained on PubMed (a database of biomedical literature) [5] abstracts and fine-tuned for specific biomedical tasks such as biomedical question answering. Our main contributions are listed as follows:

- **Development of BioMamba:** We introduce BioMamba, a domain-specific adaptation of the Mamba model that is initialized with Mamba and then fine-tuned for biomedical text mining.

*Corresponding author. fut2@rpi.edu, yuel2@rpi.edu
[1]https://github.com/LeoYML/BioMamba

- **Empirical Evaluation:** We demonstrate BioMamba's superiority over existing methods (e.g., BioBERT, BioGPT, and general-purpose Mamba) through extensive experiments on various biomedical NLP tasks. Specifically, compared with Mamba, BioMamba achieves more than 100× reduction in perplexity and over 4× reduction in cross-entropy loss in the test set of PubMed.
- **Public Release:** We publicly release the well-trained BioMamba model[2] on Hugging Face to facilitate biomedical research.

BioMamba represents a significant step forward in the application of NLP to biomedical text mining, offering enhanced performance and a deeper understanding of complex natural language in the biomedical domain.

2 Related Work

The evolution of neural network architectures for handling sequence data has seen significant advancements from Recurrent Neural Networks (RNNs) to Transformers [32], and subsequently to Bidirectional Encoder Representations from Transformers (BERT) [11], GPT (Generative Pre-trained Transformer) [4], and Structured State Space Sequence (S4) (including Mamba) [16] recently. In the biomedical domain, these advancements have been further specialized to address the unique challenges posed by biomedical texts, leading to the development of models such as BioBERT [22], PubMedBERT [17], BioGPT [27], and ClinicalMamba [34].

Recurrent neural network (RNN). To handle sequence data, the recurrent neural network (RNN) was designed, originally for natural language [19, 10]. *Token* is the basic unit of a sequence. The set of all the tokens is called the vocabulary. We suppose the sequence (e.g., sentence) of interest has T tokens, i.e., the length of the sequence is T. The sequence data can be formulated as $\mathbf{x}^{(1)}, \mathbf{x}^{(2)}, \cdots, \mathbf{x}^{(T)}$, where $\mathbf{x}^{(t)}$ is the input feature vector at time t (i.e., the t-th element in the sequence). We use $\mathbf{h}^{(1)}, \mathbf{h}^{(2)}, \cdots, \mathbf{h}^{(T)}$ to denote the hidden state (latent variable) at different times. Generally, the RNN can be formulated as

$$\mathbf{h}^{(t)} = f_1(\mathbf{x}^{(t)}, \mathbf{h}^{(t-1)}), \qquad \mathbf{o}^{(t)} = f_2(\mathbf{h}^{(t)}), \tag{1}$$

where the current hidden state $\mathbf{h}^{(t)}$ relies on both previous hidden state $\mathbf{h}^{(t-1)}$ and the current input $\mathbf{x}^{(t)}$, where $f_1(\cdot)$ and $f_2(\cdot)$ are both neural networks. However, when traditional RNNs are unrolled, they can result in a very deep neural network, with a depth equal to the length of the sequence. This can lead to the vanishing gradient problem, particularly for long sequences.

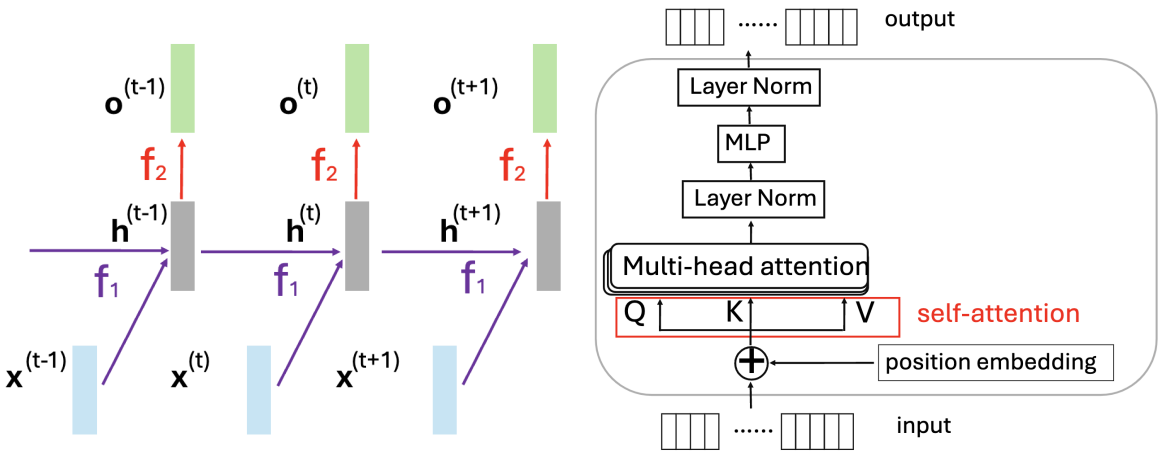

(a) RNN (b) Transformer

Figure 1: RNN versus Transformer.

[2] https://huggingface.co/LeoYML/biomamba-130m

Transformer. The inefficiency in training RNNs is primarily due to their sequential nature. To tackle this challenge, a revolutionary deep-learning architecture called the Transformer was introduced [32]. The Transformer model leverages a self-attention mechanism to identify the crucial features in the input data and performs parallel processing of the complete sequence, thus eliminating the sequential constraint and improving training efficiency. Its popularity have made it a widely adopted solution for various sequence data, including natural language processing [32], computer vision [2], speech recognition [12, 23].

Next, we present the feedforward mechanism of the Transformer block. The transformer block does not change the length of the sequence; thus, multiple transformers can be stacked to compose a deep model. A transformer block is a parameterized function denoted $\mathbf{Z} = f_\theta(\mathbf{X}) : \mathbb{R}^{T\times d} \to \mathbb{R}^{T\times d}$, where input and output of transformers are denoted $\mathbf{X} \in \mathbb{R}^{T\times d}$ and $\mathbf{Z} \in \mathbb{R}^{T\times d}$, respectively. $\mathbf{X}$ can be decomposed as $\mathbf{X} = \left(\mathbf{x}_{(1)}^\top; \mathbf{x}_{(2)}^\top; \cdots; \mathbf{x}_{(T)}^\top\right) \in \mathbb{R}^{T\times d}$, where $\mathbf{x}^{(t)}$ denotes the token embedding at the t-th step. $\mathbf{Z} = \left(\mathbf{z}_{(1)}^\top; \mathbf{z}_{(2)}^\top; \cdots; \mathbf{z}_{(T)}^\top\right) \in \mathbb{R}^{T\times d}$ are the sequence of learned representations, which have the same size as the input sequence $\mathbf{X}$. (1). **Positional embedding**. The position of a token in the sequence can be important. To incorporate positional information of a sequence, it designs an embedding vector to differentiate the relative positions. Each index is assigned an embedding vector and is added to the input feature. It is formally defined as $\widetilde{\mathbf{X}} = \text{position embedding}(\mathbf{X}) = \left(\mathbf{x}_{(1)}^\top; \mathbf{x}_{(2)}^\top; \cdots; \mathbf{x}_{(T)}^\top\right) + \left(\mathbf{p}(1)^\top; \mathbf{p}(2)^\top; \cdots; \mathbf{p}(T)^\top\right) \quad \in \mathbb{R}^{T\times d}$, where $\mathbf{p}(t) \in \mathbb{R}^d$ denotes the positional embedding for the t-th token in the sequence, which is learnable. The positional embedding $\mathbf{p}$ can be the index in the sequence to reflect the absolute position in the sequence or some patterns to indicate the relative position in the sequence, such as Sine or Cosine functions. (2). **Multi-head self-attention**. Self-attention is used to capture the correlated features in the sequence data and multi-head attention enhances the attention model by repetition. It is formally defined as

$$\mathbf{U} = \underbrace{\text{softmax}\left(\frac{(\mathbf{X}\mathbf{W}_Q)(\mathbf{X}\mathbf{W}_K)^\top}{\sqrt{d}}\right)}_{\text{attention weight, } \mathbb{R}^{T\times T}} \widetilde{\mathbf{X}}\mathbf{W}_V \quad \in \mathbb{R}^{T\times d}, \tag{2}$$

where $\mathbf{W}_Q, \mathbf{W}_K, \mathbf{W}_V \in \mathbb{R}^{T\times d}$ are trainable weight matrices. (3). **Layer normalization** is used to enhance training stability and efficiency. It evaluates the mean value and standard deviation on the whole batch on each feature dimension. Then, we subtract the mean and divide by the standard deviation on all the feature dimensions and all the data. After the layer normalization, the data distribution on each feature dimension approximately follows the unit normal distribution, whose mean is 0 and variance is 1.

Self-supervised learning and pretraining. Self-supervised learning (SSL) is a learning paradigm that derives supervision from unlabeled data. For instance, it might mask a subset of the input features and then predict the masked subset based on the surrounding context. SSL is effective for learning meaningful representations from large amounts of unlabeled data and is often used as a *pretraining* strategy. The SSL-pretrained model provides a warm start and can then be fine-tuned for downstream tasks, such as supervised learning with limited labeled data. BERT is a well-known example of pretraining model [11].

BERT Bidirectional Encoder Representations from Transformers (BERT) is a powerful pretraining technique that has its roots in the Transformer architecture and was specifically designed for natural language processing (NLP) tasks [11]. BERT is constructed by stacking multiple layers of Transformer blocks. The output of each layer is used as the input to the subsequent layer, thus allowing the model to learn increasingly complex representations of the input data. This technique results in a deep, bidirectional architecture that is capable of capturing contextual information from both the past and future tokens in a sequence. BioBERT achieves state-of-the-art performance in biomedical text mining [22].

GPT Unlike BERT, which uses bidirectional Transformer encoder architecture, GPT (Generative Pretrained Transformer) [4] employs a unidirectional Transformer decoder architecture, which is good at generating coherent and contextually relevant text, making it ideal for text generation, language translation, and conversational agents. GPT is pretrained on extensive text corpora using a language modeling objective, which involves predicting the next word in a sequence.

Structured State Space for Sequences model. Structured State Space for Sequences (S4) addresses the limitations of Recurrent Neural Networks (RNNs) and Transformers in handling long-range dependencies

and computational efficiency. S4 leverages state space models (SSMs) for capturing long-term dependencies with linear complexity, unlike RNNs with vanishing gradients and Transformers with quadratic complexity. S4 allows parallel processing similar to Transformers but with linear complexity. The core of S4 is the state space representation:

$$\mathbf{x}_{t+1} = \mathbf{A}\mathbf{x}_t + \mathbf{B}\mathbf{u}_t, \tag{3}$$

$$\mathbf{y}_t = \mathbf{C}\mathbf{x}_t + \mathbf{D}\mathbf{u}_t, \tag{4}$$

where $\mathbf{x}_t$ is the hidden state, $\mathbf{u}_t$ the input, $\mathbf{y}_t$ the output, and $\mathbf{A}$, $\mathbf{B}$, $\mathbf{C}$, $\mathbf{D}$ are learned parameters. This formulation enables efficient sequence modeling through the linear structure of SSMs. Mamba[16] is a specialized implementation within the S4 framework. It uses SSMs with dynamic parameters as functions of the input, allowing selective propagation or forgetting of information. The dynamic parameters are represented as:

$$\mathbf{A}_t = f_A(\mathbf{u}_t), \tag{5}$$

$$\mathbf{B}_t = f_B(\mathbf{u}_t), \tag{6}$$

$$\mathbf{C}_t = f_C(\mathbf{u}_t), \tag{7}$$

$$\mathbf{D}_t = f_D(\mathbf{u}_t), \tag{8}$$

where f_A, f_B, f_C, and f_D dynamically adjust parameters based on $\mathbf{u}_t$. Both S4 and Transformers allow parallel processing but differ in handling long-range dependencies and computational complexity. Transformers use self-attention with quadratic complexity, whereas S4 uses state space representations with linear complexity, making it more scalable. S4 inherently captures long-term dependencies through state transitions, unlike Transformers that require positional encodings. Mamba enhances S4 by introducing dynamic parameterization, adapting state space parameters based on input at each time step. This enables Mamba to handle varying contexts and selectively propagate or forget information, improving content-based reasoning. While S4 provides a robust foundation, Mamba's dynamic nature makes it more versatile for adaptive processing. Mamba's success in various applications, such as computer vision [35, 21], natural language processing [33, 18], and speech processing [30], demonstrates its versatility and effectiveness.

S4 versus Transformer. The S4 model and Transformers both support efficient *parallel* processing, but they differ in their handling of dependencies. Transformers use self-attention mechanisms to capture dependencies within sequences. In contrast, S4 models leverage state space models to explicitly capture long-range dependencies.

Biomedical NLP Models. In the biomedical domain, specialized models have been developed to handle the unique challenges posed by biomedical texts. BioBERT [22] is a domain-specific variant of BERT, pre-trained on large-scale biomedical corpora like PubMed abstracts and PMC full-text articles. It has shown significant improvements in various biomedical NLP tasks, such as named entity recognition (NER) and relation extraction. Similarly, PubMedBERT [17] is another BERT-based model pre-trained exclusively on PubMed abstracts, achieving state-of-the-art performance in several biomedical benchmarks.

BioGPT [27] adapts the GPT architecture for biomedical text generation and understanding, leveraging the unidirectional nature of GPT to generate coherent biomedical text and answer biomedical questions effectively. ClinicalMamba [34] is a recent adaptation of the Mamba model, fine-tuned for clinical text mining tasks, demonstrating the versatility and efficiency of the S4 framework in the biomedical domain.

These models highlight the importance of domain-specific pretraining and fine-tuning in achieving superior performance in biomedical NLP tasks, addressing the unique challenges of biomedical language and providing valuable tools for researchers and practitioners in the field.

3 Method

In this section, we briefly discuss the recently proposed Mamba model and then describe in detail the pre-training and fine-tuning processes of BioMamba. BioMamba retains the fundamental structure of Mamba. The whole framework is demonstrated in Figure 2.

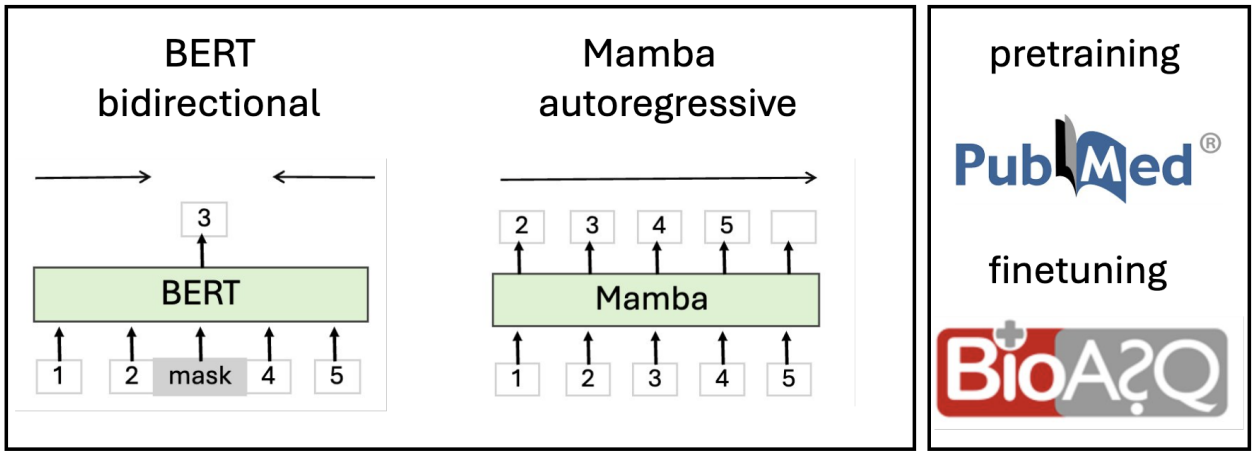

Figure 2: (left) Comparison of BERT and Mamba. BERT is pretrained on large corpora using masked language modeling [11], its bidirectional nature provides a deep understanding of the context within the text. Differently, Mamba is an autoregressive model (unidirectional) and is pretrained on unlabeled language corpus by predicting the next token [16]. (right) BioMamba: First, BioMamba uses the parameters of the general-purpose Mamba for initialization. Then, BioMamba is further pretrained on a biomedical text corpus (e.g., PubMed [5]). After that, BioMamba can be fine-tuned on downstream tasks (e.g., the question-answering BioASQ dataset).

3.1 Mamba Model

The Mamba model is a state-of-the-art sequence model designed to address the computational inefficiencies of Transformers on long sequences [16]. Traditional Transformers [32] rely heavily on the attention mechanism, which, while powerful, suffers from quadratic complexity in sequence length. This makes Transformers computationally expensive and memory-intensive, particularly for long sequences. To overcome these limitations, Mamba leverages structured state space models (SSMs) with parameters that are functions of the input.

SSMs offer a compelling alternative to attention mechanisms by providing a framework for modeling sequences with linear complexity in sequence length. This makes them more efficient for handling long sequences. Additionally, SSMs are well-suited for content-based reasoning, which is crucial for discrete modalities such as language. The core innovation of Mamba lies in its ability to selectively propagate or forget information along the sequence length dimension based on the current token. This is achieved by making the SSM parameters dynamic and dependent on the input sequence. Mathematically, this can be represented as:

$$\boldsymbol{h}_t = \mathrm{SSM}(\boldsymbol{h}_{t-1}, \boldsymbol{x}_t; \boldsymbol{\theta}(\boldsymbol{x}_t)), \tag{9}$$

where $\boldsymbol{h}_t$ is the hidden state at time step t, $\boldsymbol{x}_t$ is the input token at time step t, and $\boldsymbol{\theta}(\boldsymbol{x}_t)$ represents the dynamic parameters of the SSM that are functions of the input token $\boldsymbol{x}_t$.

Despite the dynamic nature of the SSM parameters, which prevents the use of efficient convolutions, Mamba employs a hardware-aware parallel algorithm in recurrent mode to maintain computational efficiency. This design choice ensures that Mamba can achieve fast inference with linear scaling in sequence length.

Furthermore, Mamba integrates these selective SSMs into a simplified end-to-end neural network architecture that does not rely on attention mechanisms or even multi-layer perceptron (MLP) blocks. This streamlined architecture contributes to Mamba's high throughput and scalability.

In summary, the Mamba model offers a novel approach to sequence modeling by combining the strengths of SSMs with dynamic parameterization and hardware-aware parallelism. By addressing the inefficiencies of Transformers and leveraging the advantages of SSMs, Mamba achieves state-of-the-art performance across various modalities, including language, audio, and genomics, while maintaining computational efficiency. This makes Mamba a compelling choice for applications requiring efficient and scalable sequence modeling.

3.2 Pre-training BioMamba

Pretraining is a crucial technique for learning meaningful representations from large amounts of unlabeled data. This initial training phase enables the model to capture general patterns, structures, and features from

the data without the need for labeled examples. The pretrained model provides a warm start, which can be fine-tuned for specific downstream tasks.

In this paper, BioMamba is initialized with weights from the Mamba-130m model[3]. The pretraining process involves further training on a large corpus of biomedical texts, including PubMed abstracts. PubMed [5] is a free and comprehensive database primarily used for accessing references and abstracts on life sciences and biomedical topics. It is an essential resource for researchers, healthcare professionals, and students, providing access to a vast collection of scientific literature.

While the general Mamba model may have encountered some biomedical data during its initial training, the proportion of such data is typically very small. Therefore, further pretraining on a targeted biomedical corpus is necessary to enhance the model's ability to capture domain-specific patterns and terminologies. Studies have shown that increasing the proportion of domain-specific data during pretraining significantly improves performance on related tasks [3, 22, 17].

The pretraining objective for BioMamba, as with standard autoregressive models, is next-token prediction. This objective is formulated as:

$$\mathcal{L} = -\sum_{t=1}^{T} \log P(x_t | x_{<t}; \theta), \tag{10}$$

where x_t is the t-th token in the sequence, $x_{<t}$ represents all tokens preceding x_t, and θ denotes the model parameters. This objective allows the model to learn the likelihood of each token given its preceding context, thereby capturing the sequential dependencies within the biomedical text corpus.

By leveraging the pretrained Mamba-130m model and further training on domain-specific biomedical texts, BioMamba is able to effectively capture the intricate patterns and terminologies unique to the biomedical field. This enhances its performance on downstream biomedical tasks, making it a powerful tool for applications in life sciences and healthcare.

3.3 Fine-tuning BioMamba

Fine-tuning is the subsequent phase where the pretrained model is adapted to a specific downstream task using a smaller, labeled dataset. This involves supervised learning, where the model's parameters are adjusted to optimize performance for the task at hand. After pretraining, BioMamba can be fine-tuned on specific downstream tasks in a supervised manner. In this paper, we focus on the question-answering (QA) task.

The Stanford Question Answering Dataset (SQuAD) [31] is a widely-used benchmark for training and evaluating natural language processing models, particularly for QA systems. This dataset is designed to test a model's ability to understand and extract relevant information from a given text passage. To align with the methodology presented in the BioBERT paper [22], we utilized the BioASQ factoid datasets, which were reformatted to match the structure of the SQuAD dataset.

The fine-tuning process involves training BioMamba on the BioASQ dataset (described later in Section 4.1), which contains biomedical QA pairs. The QA task can be formulated as:

$$\mathcal{L}_{\text{QA}} = -\sum_{i=1}^{N} \log P(a_i | \boldsymbol{H}), \tag{11}$$

where a_i represents the answer tokens, N is the number of tokens in the answer sentence, and $\boldsymbol{H}$ denotes the contextualized embeddings from the transformer encoder. This learning objective allows the model to optimize the probability of the correct answer given the contextualized embeddings, thereby enhancing its ability to accurately extract relevant information from biomedical texts.

By fine-tuning BioMamba on the BioASQ dataset, we aim to leverage the model's pretrained knowledge and adapt it to the specific requirements of biomedical question answering. This approach ensures that BioMamba can effectively address the nuances of biomedical language and provide accurate answers to domain-specific questions.

[3] https://huggingface.co/state-spaces/mamba-130m-hf

4 Experiments

In this section, we demonstrate experimental results. Specifically, we briefly describe the datasets in Section 4.1. Then, we elaborate on the experimental setup in Section 4.2. The experimental results are presented in Section 4.3. Additionally, we provide a case study in Section 4.4.

4.1 Dataset

Table 1: Statistics of BioASQ factoid datasets (biomedical question answering datasets).

Dataset	# train	# test
BioASQ 4b-factoid	327	161
BioASQ 5b-factoid	486	150
BioASQ 6b-factoid	618	161

The Stanford Question Answering Dataset (SQuAD) [31] serves as a benchmark for training and evaluating natural language processing (NLP) models, particularly in the realm of question answering (QA) systems. This dataset is created to assess a model's proficiency in comprehending and extracting pertinent information from a given text passage. In alignment with the methodology outlined in the BioBERT paper [22], we employed the BioASQ factoid datasets, which were reformatted to match the structure of the SQuAD dataset [31]. Detailed information is presented in Table 1. We utilized complete abstracts (PMIDs) along with the corresponding questions and answers as provided by the BioASQ organizers. The pre-processed BioASQ datasets have been made publicly accessible.

For all datasets, we adhered to the same dataset splits as utilized in prior studies to ensure a fair evaluation.

We present a comparative analysis of Mamba [16] and BioMamba against the current state-of-the-art models, reporting their respective performance metrics. Notably, Mamba and BioMamba share an identical architecture and exclusively utilize the gold standard datasets without incorporating any additional data sources.

4.2 Experimental Setup

Table 2: Different models' sizes.

Model Name	Model Size (MB)
Mamba-130m [16]	123
BioMamba (ours)	123
BioBert [22]	103
BioGPT [27]	346

Hyperparameter setup. We used the Mamba-130m model pre-trained on the Pile dataset [15] with the GPT2 tokenizer. The model sizes are shown in Table 2, with sizes comparable to BioBERT and smaller than BioGPT. Hyperparameters such as batch size and learning rate scheduling for pre-training BioMamba are the same as those for pre-training Mamba.

The BioMamba model was pre-trained with a parameter count of 124 million. The architecture consists of 12 layers, each with a model dimension of 768, same as BERT [11] and Mamba [16]. The model employs 12 attention heads, with each head having a dimension of 64. The training process involved 4800 steps, with a learning rate set at 6e-4 and a batch size of 0.5 million tokens, totaling 2.5 billion tokens.

The training utilized the AdamW optimizer [24], configured with a gradient clip value of 1.0 and a weight decay of 0.1. The training regimen did not include dropout. A linear learning rate warmup with cosine decay was applied, starting from a peak learning rate following the GPT-3 specification and decaying to 1e-5. The peak value was set at five times the GPT-3 value. Additionally, no linear bias terms were used, and RMSNorm

was employed instead of LayerNorm. The AdamW optimizer's [24] hyperparameters were set to B = (0.9, 0.95), following the GPT-3 configuration, as opposed to the PyTorch default of B = (0.9, 0.999).

BioMamba supports a context length of 2048 and was pre-trained autoregressively. The standard autoregressive task aimed to predict the next token, using cross-entropy loss as the objective function.

Evaluation Metrics. For evaluating model performance on the BioASQ datasets, we utilize two important metrics: Accuracy (ACC) and Mean Reciprocal Rank (MRR). These metrics provide a comprehensive assessment of the models' capabilities in different aspects:

- **Accuracy (ACC):** This metric measures the proportion of exact matches between the predicted and the correct answers. It is a stringent measure that requires the predicted answer to be exactly the same as the ground truth.
- **Mean Reciprocal Rank (MRR):** This metric evaluates the rank of the correct answer among the predicted answers. It is the average of the reciprocal ranks of the correct answers, providing insight into how high the correct answers are ranked by the model.

For all baselines, we report the Accuracy (ACC) and Mean Reciprocal Rank (MRR) scores on each dataset to facilitate a detailed comparison of their performance. For both scores, higher values indicate better performance.

In addition to these metrics, for autoregressive models such as BioGPT and Mamba, we utilize Perplexity (PPL) and cross-entropy (CE) as further evaluation metrics. Perplexity is a measure of how well a probability model predicts a sample and is specifically defined to assess the likelihood of words in a sequence. Mathematically, perplexity is the exponential of the average negative log-likelihood, which quantifies the model's uncertainty in predicting the next word [1]. Formally, it is defined as:

$$\text{Perplexity}(\mathbf{S}) = \exp\Big\{-\frac{1}{N}\sum_{i=1}^{N}\log Q(\mathbf{s}_i|\mathbf{S}_{<i})\Big\}, \tag{12}$$

where $\mathbf{S}$ represents a sentence, $\mathbf{s}_i$ denotes the i-th word in $\mathbf{S}$, and $\mathbf{S}_{<i}$ refers to the sequence of words preceding the i-th word in $\mathbf{S}$. The term $Q(\mathbf{s}_i|\mathbf{S}_{<i})$ is the conditional probability of the i-th word given the preceding words, as predicted by a well-trained language model. Lower perplexity values indicate better model performance, as they reflect higher likelihoods of the observed sequences.

The cross-entropy (CE) function measures the distance between two categorical probability distributions and is a popular loss function for classification. That is,

$$\text{cross-entropy}(\mathbf{y}, \tilde{\mathbf{y}}) = \sum_{k=1}^{K} y_k \log \tilde{y_k}, \tag{13}$$

where $\mathbf{y} = [y_1, \cdots, y_K]^\top \in \{0,1\}^K$ is a K-dimensional vector, where only one element is 1 while others are 0. This is known as a *one-hot* vector. If the k-th element is 1, then it indicates the data belongs to the k-th category. $\widetilde{\mathbf{y}} = [\widetilde{y_1}, \cdots, \widetilde{y_K}]^\top \in (0,1)^K$ is K-dimensional vector, where the k-th element denotes the predicted probability between 0 and 1 that the data point belongs to the k-th category. The sum of all the elements is equal to 1. Lower cross-entropy loss indicates better performance.

Hardware. During the pre-training phase, we utilized a cluster of eight NVIDIA V100 GPUs, each equipped with 32GB of memory. Due to the high computational demands, our experiments were focused solely on the Mamba-130m model.

For the fine-tuning stage, we transitioned to a single NVIDIA A5000 GPU with 24GB of memory to fine-tune BioMamba specifically for the BioASQ task. It's important to note that the fine-tuning process is significantly less computationally intensive compared to the pre-training phase.

4.3 Results & Discussion

From the results reported in Table 3, BioMamba achieves the highest performance, significantly outperforming Mamba trained on a general dataset. This highlights the importance of domain-specific training. Additionally,

Table 3: Biomedical question answering test results.

Datasets	Metrics	BioBert	BioGPT	Mamba	BioMamba
BioASQ 4b	ACC (↑)	0.154	0.154	0.128	**0.359**
	MRR (↑)	0.184	0.205	0.141	**0.362**
BioASQ 5b	ACC (↑)	0.160	0.120	0.120	**0.360**
	MRR (↑)	0.257	0.127	0.140	**0.403**
BioASQ 6b	ACC (↑)	0.129	0.032	0.129	**0.194**
	MRR (↑)	0.185	0.032	0.129	**0.290**

BioMamba surpasses both BioBERT and BioGPT, showcasing the potential of the Mamba architecture over BERT and GPT in the biomedical domain.

The superior performance of BioMamba can be attributed to its foundation on the S4 (Structured State Space Sequence) model. Unlike BERT and GPT, which rely on transformer architectures, the S4 model excels in handling long-range dependencies and structured sequences more efficiently. This is particularly advantageous in the biomedical domain, where understanding complex relationships and terminologies is crucial.

The S4 model's ability to maintain and process long-term dependencies allows BioMamba to better capture the intricate details and context within biomedical texts. Compared to the transformer-based architectures of BERT and GPT, this results in more accurate and relevant information retrieval and generation.

Table 4: Performance of Autoregressive Models on the PubMed Dataset.

Dataset	Model	Perplexity (↓)	Cross-Entropy Loss (↓)
PubMed	BioGPT	4535.04	8.42
	Mamba	505.62	6.23
	BioMamba	**2.93**	**1.07**

Furthermore, we conducted a comprehensive evaluation of three autoregressive models—BioGPT, Mamba, and BioMamba—on the PubMed abstract dataset. The evaluation metrics used were perplexity and cross-entropy loss, both of which are critical indicators of a model's performance in natural language processing tasks. The experimental results, as presented in Table 4, reveal that BioMamba significantly outperforms both BioGPT and Mamba across the PubMed dataset. Specifically, BioMamba achieves a perplexity of 2.93 and a cross-entropy loss of 1.07, which are markedly lower than those of BioGPT (perplexity: 4535.04, cross-entropy loss: 8.42) and Mamba (perplexity: 505.62, cross-entropy loss: 6.23). These results underscore BioMamba's superior ability to understand and predict text within the biomedical domain.

4.4 Case Study

Table 5: Example of generated text to a BioASQ-factoid Question.

Model	**Sample**
	Q: What is the association of spermidine with α-synuclein neurotoxicity?
Ideal Answer	Spermidine protects against α-synuclein neurotoxicity
Mamba	A: Spermissible **Spermidine** is a neurotoxin vitro study.
BioMamba	A: Speridin is aconitine is a natural product **spermidine that protects against α-synuclein neurotoxicity**.
BioBERT	A: Caenorhabdit
BioGPT	A: **Spermidine**, a naturally occurring polyamine, alleviated **α-synuclein-**induced loss of climbing activity ...

Table 5 provides an example from the BioASQ-factoid dataset. These questions require extracting answers

directly from the given context. We sampled predictions from BioBERT, BioGPT, Mamba, and BioMamba to observe the effect of pre-training on downstream tasks.

The results show that Mamba often provides incorrect or nonsensical answers to simple biomedical questions, as seen in its response, which incorrectly identifies spermidine as a neurotoxin. This suggests that Mamba's pre-training may not have been sufficiently specialized for biomedical text.

BioMamba, on the other hand, delivers more accurate answers, correctly identifying that spermidine protects against α-synuclein neurotoxicity. This indicates that BioMamba's pre-training on biomedical data has significantly improved its performance on domain-specific tasks. Additionally, BioMamba is capable of providing more detailed responses, including longer-named entities, which is crucial for the precision required in biomedical contexts.

BioBERT's response, "Caenorhabdit", is incomplete and irrelevant to the question, highlighting a potential issue with its ability to extract specific information from the context.

BioGPT provides a partially correct answer, recognizing spermidine as a naturally occurring polyamine and mentioning its role in alleviating α-synuclein-induced loss of climbing activity. However, it does not explicitly state the protective effect against neurotoxicity, which is the key information required.

Overall, the analysis demonstrates that pre-training on domain-specific data, as seen with BioMamba, significantly enhances the model's ability to understand and respond to biomedical questions accurately. This underscores the importance of specialized pre-training for improving performance in specific domains.

5 Broader Impact

BioMamba has the potential to significantly advance biomedical research and healthcare by providing efficient and accurate text mining tools [37]. It can accelerate the discovery of new insights from biomedical literature, aiding in gene pathway identification [26, 6], drug target identification [39, 14], disease mechanism understanding [40], and therapeutic strategy development [8]. Additionally, BioMamba can enhance clinical decision support systems [25, 9], improving patient outcomes by providing healthcare professionals with precise and contextually relevant information [36, 38].

6 Conclusion

In this paper, we have introduced BioMamba, a state-of-the-art pre-trained language model for biomedical text mining. Utilizing the advanced Mamba architecture with structured state space models (SSMs) and dynamic parameterization, BioMamba efficiently handles long sequences. Pre-trained on a vast biomedical corpus and fine-tuned for specific tasks like question answering, BioMamba significantly outperforms existing models, including BioBERT. Our results demonstrate its superior understanding of complex biomedical terminologies and contexts, highlighting its potential as a valuable tool for the biomedical research community. Future work will extend BioMamba to additional biomedical tasks and further optimize its performance, contributing to advancements in NLP applications for biomedical research and healthcare.

References

[1] Jose Juan Almagro Armenteros et al. Language modelling for biological sequences–curated datasets and baselines. *BioRxiv*, 2020.

[2] Anurag Arnab, Mostafa Dehghani, Georg Heigold, Chen Sun, Mario Lučić, and Cordelia Schmid. Vivit: A video vision transformer. In *Proceedings of the IEEE/CVF international conference on computer vision*, pages 6836–6846, 2021.

[3] Iz Beltagy, Kyle Lo, and Arman Cohan. Scibert: A pretrained language model for scientific text. *arXiv preprint arXiv:1903.10676*, 2019.

[4] Tom Brown, Benjamin Mann, Nick Ryder, Melanie Subbiah, Jared D Kaplan, et al. Language models are few-shot learners. In *Advances in Neural Information Processing Systems*, 2020.

[5] Kathi Canese and Sarah Weis. Pubmed: the bibliographic database. *The NCBI handbook*, 2(1), 2013.

[6] Yi-Tan Chang, Eric P Hoffman, Guoqiang Yu, David M Herrington, Robert Clarke, Chiung-Ting Wu, Lulu Chen, and Yue Wang. Integrated identification of disease specific pathways using multi-omics data. *bioRxiv*, page 666065, 2019.

[7] Sudha Cheerkoot-Jalim and Kavi Kumar Khedo. A systematic review of text mining approaches applied to various application areas in the biomedical domain. *Journal of Knowledge Management*, 25(3):642–668, 2021.

[8] Jintai Chen, Yaojun Hu, Yue Wang, Yingzhou Lu, Xu Cao, Miao Lin, Hongxia Xu, Jian Wu, Cao Xiao, Jimeng Sun, et al. Trialbench: Multi-modal artificial intelligence-ready clinical trial datasets. *arXiv preprint arXiv:2407.00631*, 2024.

[9] Tianyi Chen, Nan Hao, Yingzhou Lu, and Capucine Van Rechem. Uncertainty quantification on clinical trial outcome prediction. *arXiv preprint arXiv:2401.03482*, 2024.

[10] Kyunghyun Cho, Bart van Merrienboer, Caglar Gulcehre, Dzmitry Bahdanau, Fethi Bougares, Holger Schwenk, and Yoshua Bengio. Learning phrase representations using RNN Encoder–Decoder for statistical machine translation. In *Proceedings of the 2014 Conference on Empirical Methods in Natural Language Processing (EMNLP)*, pages 1724–1734, Stroudsburg, PA, USA, 2014. Association for Computational Linguistics.

[11] Jacob Devlin, Ming-Wei Chang, Kenton Lee, and Kristina Toutanova. BERT: pre-training of deep bidirectional transformers for language understanding. In *Proceedings of the 2019 Conference of the North American Chapter of the Association for Computational Linguistics: Human Language Technologies, NAACL-HLT 2019.*, pages 4171–4186. Association for Computational Linguistics, 2019.

[12] Linhao Dong, Shuang Xu, and Bo Xu. Speech-transformer: a no-recurrence sequence-to-sequence model for speech recognition. In *2018 IEEE international conference on acoustics, speech and signal processing (ICASSP)*, pages 5884–5888. IEEE, 2018.

[13] Wilco WM Fleuren and Wynand Alkema. Application of text mining in the biomedical domain. *Methods*, 74:97–106, 2015.

[14] Yi Fu, Yingzhou Lu, Yizhi Wang, Bai Zhang, Zhen Zhang, Guoqiang Yu, Chunyu Liu, Robert Clarke, David M Herrington, and Yue Wang. Ddn3. 0: Determining significant rewiring of biological network structure with differential dependency networks. *Bioinformatics*, page btae376, 2024.

[15] Leo Gao, Stella Biderman, Sid Black, Laurence Golding, Travis Hoppe, Charles Foster, Jason Phang, Horace He, Anish Thite, Noa Nabeshima, et al. The pile: An 800gb dataset of diverse text for language modeling. *arXiv preprint arXiv:2101.00027*, 2020.

[16] Albert Gu and Tri Dao. Mamba: Linear-time sequence modeling with selective state spaces. *arXiv preprint arXiv:2312.00752*, 2023.

[17] Yu Gu, Robert Tinn, Hao Cheng, Michael Lucas, Naoto Usuyama, Xiaodong Liu, Tristan Naumann, Jianfeng Gao, and Hoifung Poon. Domain-specific language model pretraining for biomedical natural language processing. *ACM Transactions on Computing for Healthcare (HEALTH)*, 3(1):1–23, 2021.

[18] Wei He, Kai Han, Yehui Tang, Chengcheng Wang, Yujie Yang, Tianyu Guo, and Yunhe Wang. Densemamba: State space models with dense hidden connection for efficient large language models. *arXiv preprint arXiv:2403.00818*, 2024.

[19] S Hochreiter and J Schmidhuber. Long short-term memory. *Neural Comput.*, 9(8):1735–1780, November 1997.

[20] Essam H Houssein, Rehab E Mohamed, and Abdelmgeid A Ali. Machine learning techniques for biomedical natural language processing: a comprehensive review. *IEEE Access*, 9:140628–140653, 2021.

[21] Tao Huang, Xiaohuan Pei, Shan You, Fei Wang, Chen Qian, and Chang Xu. Localmamba: Visual state space model with windowed selective scan. *arXiv preprint arXiv:2403.09338*, 2024.

[22] Jinhyuk Lee, Wonjin Yoon, Sungdong Kim, Donghyeon Kim, Sunkyu Kim, Chan Ho So, and Jaewoo Kang. BioBERT: a pre-trained biomedical language representation model for biomedical text mining. *Bioinformatics*, 36(4):1234–1240, 2020.

[23] Jiaju Lin and Haoxuan Hu. Audio mamba: Pretrained audio state space model for audio tagging. *arXiv preprint arXiv:2405.13636*, 2024.

[24] Ilya Loshchilov and Frank Hutter. Decoupled weight decay regularization. *arXiv preprint arXiv:1711.05101*, 2017.

[25] Yingzhou Lu, Tianyi Chen, Nan Hao, Capucine Van Rechem, Jintai Chen, and Tianfan Fu. Uncertainty quantification and interpretability for clinical trial approval prediction. *Health Data Science*, 4:0126, 2024.

[26] Yingzhou Lu, Chiung-Ting Wu, Sarah J Parker, Zuolin Cheng, Georgia Saylor, Jennifer E Van Eyk, Guoqiang Yu, Robert Clarke, David M Herrington, and Yue Wang. COT: an efficient and accurate method for detecting marker genes among many subtypes. *Bioinformatics Advances*, 2(1):vbac037, 2022.

[27] Renqian Luo, Liai Sun, Yingce Xia, Tao Qin, Sheng Zhang, Hoifung Poon, and Tie-Yan Liu. Biogpt: generative pre-trained transformer for biomedical text generation and mining. *Briefings in bioinformatics*, 23(6):bbac409, 2022.

[28] Giacomo Miolo, Giulio Mantoan, and Carlotta Orsenigo. Electramed: a new pre-trained language representation model for biomedical nlp. *arXiv preprint arXiv:2104.09585*, 2021.

[29] Anastasios Nentidis, Georgios Katsimpras, Anastasia Krithara, Salvador Lima López, Eulália Farré-Maduell, Luis Gasco, Martin Krallinger, and Georgios Paliouras. Overview of bioasq 2023: The eleventh bioasq challenge on large-scale biomedical semantic indexing and question answering. *arXiv:2307.05131*, 2023.

[30] Changsheng Quan and Xiaofei Li. Multichannel long-term streaming neural speech enhancement for static and moving speakers. *arXiv preprint arXiv:2403.07675*, 2024.

[31] Pranav Rajpurkar, Jian Zhang, Konstantin Lopyrev, and Percy Liang. Squad: 100,000+ questions for machine comprehension of text. *arXiv preprint arXiv:1606.05250*, 2016.

[32] Ashish Vaswani, Noam Shazeer, Niki Parmar, Jakob Uszkoreit, Llion Jones, Aidan N Gomez, Łukasz Kaiser, and Illia Polosukhin. Attention is all you need. In *Advances in neural information processing systems*, pages 5998–6008, 2017.

[33] Roger Waleffe, Wonmin Byeon, Duncan Riach, Brandon Norick, Vijay Korthikanti, Tri Dao, Albert Gu, Ali Hatamizadeh, Sudhakar Singh, Deepak Narayanan, et al. An empirical study of mamba-based language models. *arXiv preprint arXiv:2406.07887*, 2024.

[34] Zhichao Yang, Avijit Mitra, Sunjae Kwon, and Hong Yu. Clinicalmamba: A generative clinical language model on longitudinal clinical notes. *arXiv preprint arXiv:2403.05795*, 2024.

[35] Weihao Yu and Xinchao Wang. Mambaout: Do we really need mamba for vision? *arXiv preprint arXiv:2405.07992*, 2024.

[36] Ling Yue, Jonathan Li, Sixue Xing, Md Zabirul Islam, Bolun Xia, Tianfan Fu, and Jintai Chen. Trialdura: Hierarchical attention transformer for interpretable clinical trial duration prediction, 2024.

[37] Ling Yue, Sixue Xing, Jintai Chen, and Tianfan Fu. Clinicalagent: Clinical trial multi-agent system with large language model-based reasoning, 2024.

[38] Ling Yue, Sixue Xing, Jintai Chen, and Tianfan Fu. Trialenroll: Predicting clinical trial enrollment success with deep & cross network and large language models, 2024.

[39] Bai Zhang, Yi Fu, Yingzhou Lu, Zhen Zhang, Robert Clarke, Jennifer E Van Eyk, David M Herrington, and Yue Wang. DDN2.0: R and python packages for differential dependency network analysis of biological systems. *bioRxiv*, pages 2021–04, 2021.

[40] Yongqi Zhang, Quanming Yao, Ling Yue, Xian Wu, Ziheng Zhang, Zhenxi Lin, and Yefeng Zheng. Emerging drug interaction prediction enabled by a flow-based graph neural network with biomedical network. *Nature Computational Science*, 3(12):1023–1033, 2023.